Fermilab CD/DCI Tech Note

Cable, Fiber-TN-002.29

The following specifications apply to all fiber optic "pigtailed" cable assemblies including multistrand (breakout, distributed fan out, unitized) and ribbonized cables terminated with ST, SC, MT, MIC, MT-RJ, VF45, LC etc. connectors and purchased by Fermilab Computing Division/Data Communications Group (DCG), Data Communications Installations (DCI), or any other Fermilab groups ordering cables using this tech note's part numbers. Users should always purchase cords from recommended vendors only to ensure compliance with tech notes. Call Fermi CD/Data Comm. for a list of qualified vendors or visit our web page at http://computing.fnal.gov/dci/Document-pdf-Files/Cable-Assy-Houses.pdf. Use the Fermi part number(s) on Purchase Requests when ordering cables, unless directed otherwise. *Red sidebar indicates most recent change to this Tech Note. Orange sidebar indicates previous change.*

1. CABLE
   =====

   a.) Deleted.

   b.) Conventional Multistrand Cable

      1.) The 6-strand riser-rated (OFNR) multimode assemblies must use Siecor 006K81-31141-24 cable.

      2.) The 6-strand plenum-rated (OFNP) multimode assemblies must use Siecor 006K88-31141-29 cable.

      3.) The 12-strand riser-rated multimode assemblies must use Siecor 012K81-33141-24 cable.

      4.) The 12-strand plenum-rated multimode assemblies must use Siecor 012K88-33141-29 cable.

      5.) The 12-strand riser-rated single mode assemblies must use Siecor 012-R81-33131-24 cable.

      6.) The 12-strand plenum-rated single mode assemblies must use Siecor 012-R88-33131-29 cable.

      7.) The 24-strand riser-rated multimode assemblies must use Siecor 024K81-33141-24 cable.

      8.) The 24-strand plenum-rated multimode assemblies must use Siecor 024K88-33141-29 cable.

      9.) The 24-strand riser-rated single mode assemblies must use Siecor 024R81-33131-24 cable.

      10.) The 24-strand plenum-rated single mode assemblies must use Siecor 024R88-33131-29 cable.

11.) The 4-strand riser-rated (OFNR) multimode assemblies must use Corning #004K81-31130-24 cable.

12.) The 4-strand plenum-rated (OFNP) multimode assemblies must use Corning #004K88-31130-29 cable.

13.) The 4-strand riser-rated (OFNR) single-mode assemblies must use Corning #004R81-31131-24 cable.

14.) The 4-strand plenum-rated (OFNP) single-mode assemblies must use Corning #004KR88-31131-29 cable.

c.) Ribbonized Cable

1.) The 12-strand riser-rated multimode assemblies must use Alcoa Fujikura WP01261C1001 or Corning Cable Systems' 012KJ1-T3140-0F.

2.) The 12-strand plenum-rated multimode assemblies must use Alcoa Fujikura WP01261C1101 or Corning Cable Systems' 012KJ8-T3140-0F .

3.) The 12-strand riser-rated single mode assemblies must use Alcoa Fujikura WP01291C1101 or Corning Cable Systems' 012RJ1-T3131-0F.

4.) The 12-strand plenum-rated single mode assemblies must use Alcoa Fujikura WP01261C1001 or Corning Cable Systems' 012RJ8-T3131-0F.

5.) The 24-strand riser-rated multimode assemblies must use Alcoa Fujikura WPxxxxxxxxxxx cable.

6.) The 24-strand plenum-rated multimode assemblies must use Alcoa Fujikura WP02462C1012 cable.

7.) The 24-strand riser-rated single mode assemblies must use Alcoa Fujikura WPxxxxxxxxxx cable.

8.) The 24-strand plenum-rated single mode assemblies must use Alcoa Fujikura WPxxxxxxxxxx cable.

d.) ABF Cable Air Blown Fiber bundles are not fire-rated (NR).

1.) The 2-strand multimode assemblies must use Sumitomo FR02M6.

2.) The 4-strand multimode assemblies must use Sumitomo FB04M6.

3.) The 6-strand multimode assemblies must use Sumitomo FB06M6.

4.) The 12-strand multimode assemblies must use Sumitomo FB12M6.

5.) The 18-strand multimode assemblies must use Sumitomo FB18M6.

6.) The 4-strand single mode assemblies must use Sumitomo FB04SX.

7.) The 6-strand single mode assemblies must use Sumitomo FB06SX .

8.) The 12-strand single mode assemblies must use Sumitomo FB12SX.

9.) The 18-strand single mode assemblies must use Sumitomo FB18SX.

2. CONNECTORS

a.) All multimode ST connectors shall be 3M # 6100, AMP 503677-3 or Siecor 95-101-44.

b.) Multimode SC connectors shall be 3M # 6300 (if clips are needed use 3M # 6399DC), AMP #503948-1 or Siecor # 95-100-48.

c.) All single mode ST connectors shall be 3M # 8106 or Siecor 95-200-06.

d.) Single mode SC connectors shall be 3M# 8306 or Siecor # SC-95-200-08.

e.) LC connectors shall be Lucent Commcode 107 764 292.

f.) All MIC (FDDI) connectors shall be AMP #502015-1.

g.) All multimode MTRJ ferrules shall be US Conec MTF-2MM7NB-01 or Siecor 91-100-97-BP.

h.) Multimode female MTRJ(F) connectors (the side **without** the alignment pins) shall be Molex 86003-3030 or Siecor 91-100-97-BP.

i.) Multimode male MTRJ(M) connectors (the side **with** the alignment pins) shall be Molex 86003-3030 or Siecor 91-100-97-BP (with Corning 91-100-PIN-BP).

j.) All single mode ST angled PC (APC) connectors shall be Molex #xxxxxx.

k.) Single mode SC angled PC (APC) connectors shall be Molex #86065-5000.

l.) All multimode 12-fiber "male" MT(M) connectors shall be US Conec # MTP-012M-MM and **have alignment pins**.

m.) All multimode 12-fiber "female" MT(F) connectors shall be US Conec # MTP-012F-MM.

n.) All multimode 12-fiber ferrules shall be US Conec # MTF-12MM7.

o.) All single mode 12-fiber "male" MT(M) connectors shall be US Conec # MTP-012M-SM and **have alignment pins**.

p.) All single mode 12-fiber "female" MT(F) connectors shall be US Conec # MTP-012F-SM.

q.) All single mode 12-fiber ferrules shall be US Conec # MTFA-12SM5.

r.) Singlemode female MTRJ(F) connectors (the side **without** the alignment pins) shall be Molex ######### or Siecor 91-200-97-BP.

s.) Singlemode male MTRJ(M) connectors (the side **with** the alignment pins) shall be Molex ###### or Siecor 91-200-97-BP (with Corning 91-200-PIN-BP).

3. DESIGN
   ======

a.) No-Jacket Pigtail

1.) The total outside diameter (O.D.) shall be 900 microns. (No strength members or outer jacket.)

b.) Furcating Pigtails

1.) Ribbon-MT

Each 250-micron fiber in a pigtail assembly shall have a 1 mm furcation jacket 15 inches (+/- 1 in.) long. The fiber shall be slightly longer than the furcation jacket, thus allowing slack for bends.

The MT-XX (where XX is ST, SC, etc) assemblies and MT-blunt (one end unterminated) assemblies shall have a "male" MT(M) connector.

The trunk assemblies (MT to MT) shall have "female" MT(F) connectors at both ends.

2.) ABF

Each 250-micron fiber in a pigtail assembly shall have a 1 mm furcation jacket 15 inches (+/- 1 in.) long. The fiber shall be slightly longer than the furcation jacket, thus allowing slack for bends.

c.) 3mm-Jacketed Pigtails & Conventional Cable

1.) Connectorized-to-blunt assemblies: shall have pigtails (known as Part-A) 15 inches long*, +/- one inch. The assemblies will be ordered in tip-to-tip (Part-A to Part-C) lengths. On the unterminated (blunt) end, the 900-micron length from tip to breakout (known as Part-C) shall be 15 feet long*. The cable jacket must be scored at Part-B such that Part-C can be easily removed once the cable is installed. At least 10 inches of strength-member must be left at Part-B. The drawing below shows tip-to-tip Parts for connectorized-to-blunt cable:

```
|<----------------- Cable Length ----------------->|
   pigtails                              blunt
-]----------|=======================|-------------
      A                  B                C
```

2.) Connectorized-to-connectorized assemblies shall have pigtails (known as Part-A and Part-C) 15 inches long*, +/- one inch. The assemblies will be ordered in tip-to-tip (Part-A to Part-C) lengths. The drawing below shows tip-to-tip Parts for connectorized-to-connectorized cable:

```
|<----------------- Cable Length ----------------->|
   pigtails                             pigtails
-]----------|=======================|-----------[-
    A                  B                C
```

d.) No-Jacket Sub unitized Pigtails

1.) These assemblies shall have 900-micron pigtails 14 inches long* (known as Part-A: from connector tip to subunit jacket). Subunit jackets (known as Part-B & Part-D) shall be 5 inches long*. For these assemblies, the individual 900-micron strands will not have jackets or furcations tubes. The assemblies will be ordered in tip-to-tip (Part-A to Part-E) lengths. For unterminated (blunt) ends, the 900 micron length from tip to subunit jacket (known as Part-E) shall be 15 feet long*. The subunit jacket must be scored at Part-D such that Part-E can be easily removed once the cable is installed. At least 10 inches of strength-member must be left at subunit Part-D. The drawing below shows tip-to-tip Parts for a connectorized-to-blunt cable:

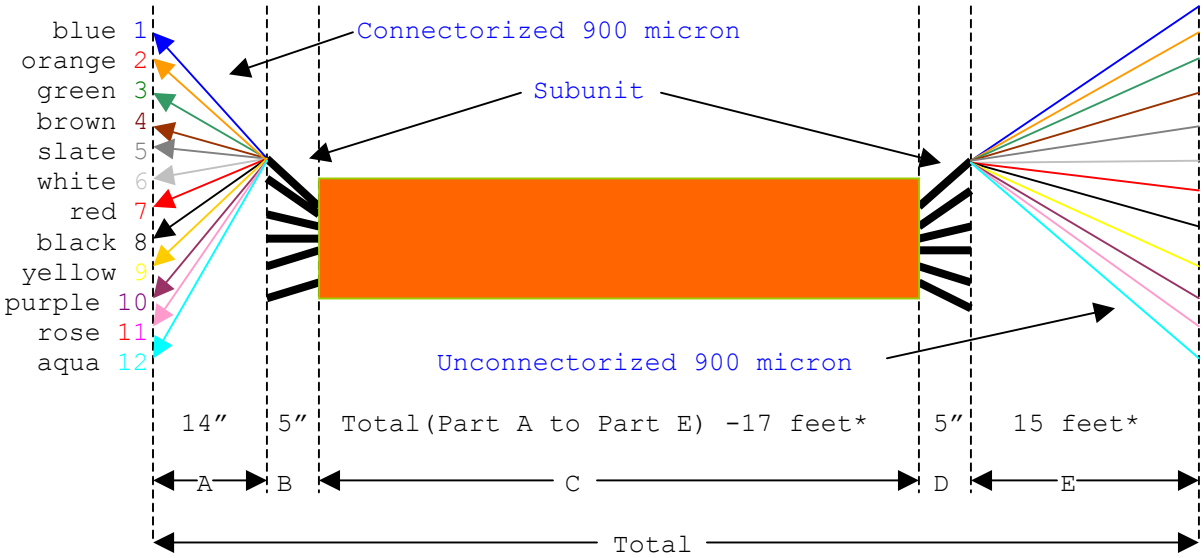

* Unless otherwise stated on Purchase/ProCard Order.

e.) Pigtail & Strand Numbering

1.) Single-Strand Pigtails

The pigtails shall be labeled using the Siecor Pigtail/Fiber Color Code where: blue is strand (Str) #1, orange is #2, green is #3, brown is #4, slate is #5, white is #6, red is # 7, black is #8, yellow is #9, violet is # 10, rose is # 11, and aqua is # 12.

2.) Multi-Strand Pigtail

a.) MTRJ

As you face an MTRJ connector, key up, on all MTRJ-XX (where XX is ST, SC, Un etc) assemblies, the right side fiber will be the odd-numbered strand (i.e. blue, green, etc) and the XX connector boot on that leg shall be red. If arrows are used to show direction of signal flow, the fiber with the red boot shall have the arrow pointing toward the XX connector.

The first MTRJ pigtail in an MTRJ-XX assembly will be labeled "Str1 & Str2", the second "Str3 & Str4" etc.

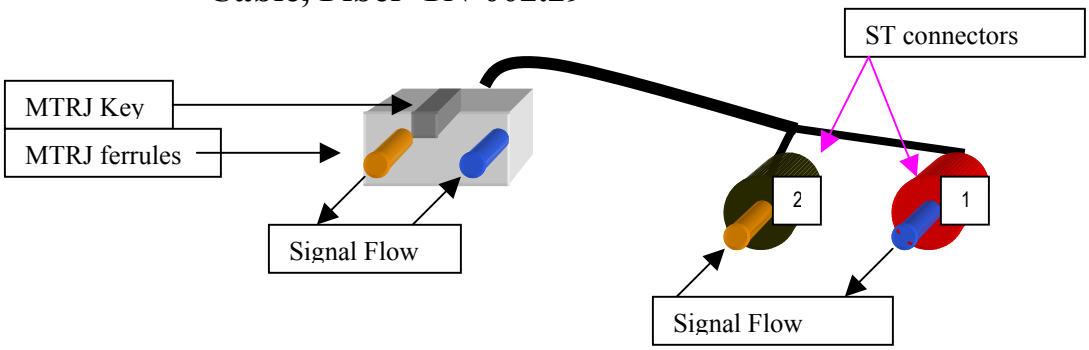

b.) Ribbon

The "lettered" bundle of a 24-strand ribbon shall be strands 1-12 and the un-lettered bundle shall be strands 13-24.

c.) ABF

The 6-strand sub-bundle with the red strand shall be strands 1-6. The 6-strand sub-bundle with the yellow strand shall be strands 7-12. The 6-strand sub-bundle with the violet strand shall be strands 13-18.

f.) 3mm-Jacketed Pigtails & Ribbon Cable

1.) Connectorized-to-blunt assemblies: shall have pigtails (known as Part-A) 15 inches long*, +/- one inch. The assemblies will be ordered in tip-to-tip (Part-A to Part-B) lengths. The drawing below shows tip-to-tip Parts for connectorized-to-blunt cable:

```
|<----------------- Cable Length ----------------->|
   pigtails                                 blunt
-]----------|=====================================
      A                            B
```

2.) Connectorized-to-connectorized assemblies shall have pigtails (known as Part-A and Part-C) 15 inches long*, +/- one inch. The assemblies will be ordered in tip-to-tip (Part-A to Part-C) lengths. The drawing below shows tip-to-tip Parts for connectorized-to-connectorized cable:

```
|<----------------- Cable Length ----------------->|
   pigtails                               pigtails
-]----------|========================|-----------[-
    A                    B                 C
```

4. LOSS PERAMETERS

a.) Super-PC (XPC) polished connectors reflectance must be <-45dB.

b.) Ultra-PC (UPC) polished connector reflectance must be <-50dB.

c.) MT-RJ reflectance must be <-35dB.

d.) Assembled multimode single-strand pigtail and conventional multistrand cable shall have insertion loss less than 1.0 dB per leg, pigtail-to-pigtail @ 850nm and 1300nm using TIA/EIA-526-14 Method-A test procedure. Pigtail-to-blunt assemblies shall be tested in a pigtail-to-pigtail construction before being cut.

e.) Assembled single mode single-strand pigtail and conventional multistrand cable shall have no more than 0.50 dB insertion loss per leg, pigtail-to-pigtail @ 1310nm and 1550nm using TIA/EIA-526-7 method A test procedure. Pigtail-to-blunt assemblies shall be tested in a pigtail-to-pigtail construction before being cut.

f.) Assembled multimode MT-MT ribbonized cable shall have insertion loss of 1.0dB or less per end as tested in a pigtail-MT to MT-MT to MT-pigtail setup @ 850nm and 1300nm using EIA 526-14 Method-A test procedure. The pigtail-MT to MT-MT to MT-pigtail end-to-end loss must be 2.5dB or less. MT-blunt assemblies shall be tested in a pigtail-MT-pigtail setup before being cut.

g.) Assembled single mode MT-MT ribbonized cable shall have no more than 0.50dB insertion loss per end as tested in a pigtail-MT to MT-MT to MT-pigtail setup @ 1310nm and 1550nm using EIA 526-14 Method-A test procedure. The pigtail-MT to MT-MT to MT-pigtail end-to-end loss must be 1.5dB or less. MT-blunt assemblies shall be tested in a pigtail-MT-pigtail setup before being cut.

5. MECHANICAL
==========

a.) For pigtails with jackets, all connectors must have proper strain relief such that tugging forces are exerted only on the cable strength members and/or jacket, not directly on the fibers in the ferrule assembly.

b.) Strain-relief boots shall be glued to the cable jacket such that it does not rotate freely or slide away from the connector.

c.) The "pigtail" fan-out mechanism shall employ the Siecor Spider Fan-Out Kit or "equivalent". If "equivalent" is used, only Dual Wall Adhesive Lined Thin Wall Heat Shrink such as Panduit HSTTA25-48-Q can be used. "Equivalent" fan-out cables whose strand counts are multiples of three must have shrink tube strain relief in groups of three strands, with an overall ½ inch diameter Epoxy-filled heatshrink tubing of no more than four sub groups, as per the following illustration:

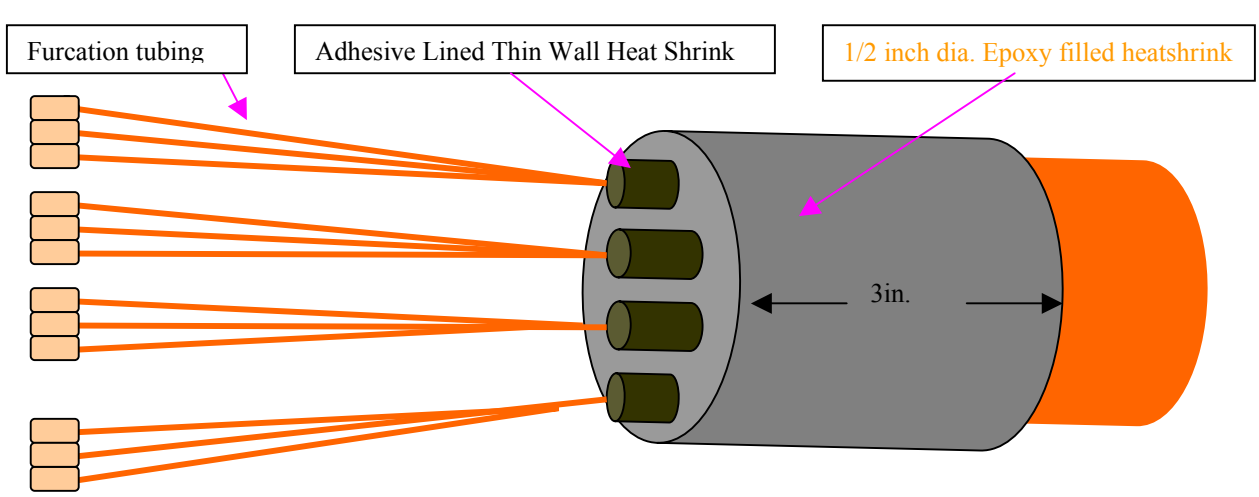

d.) All conventional multistrand cables must have a rip cord.

* Unless otherwise stated on Purchase/ProCard Order.

6. LABELING
========

a.) Cables must be labeled flag-style, six inches from the fan out point on both ends. For an unconnectorized end the label should be six inches from the end of the jacket.

b.) All cable labels must contain the following information: the vendor name, the vendor part number and a unique serial number. Serial numbers must be in one of the following formats:

1.) Purchase Orders

The serial number shall be derived from the Purchase Order number and be in the following format: XXX-YYYYYY, where XXX is a number that begins from 001 and increments by 1 up to the total number of cables being made by that vendor for that Purchase Order (regardless of whether the Purchase Order includes other assembled cables which are not fiber) and YYYYYY is the Purchase Order number.

2.) Computing Division ProCard Orders

The serial number shall be derived from the ProCard number and be in the following format: SN: XXX-PRNZZZZZ, where XXX is a number that begins from 001 and increments by 1 up to the total number of cables being made by that vendor for that ProCard Order (regardless of whether the ProCard Order includes other assembled

cables which are not fiber cords); ZZZZZ is the PRN number of the ProCard order.

3.) Non-Computing Division ProCard Orders

The serial number shall be derived from the ProCard number and be in the following format: XXX-ZZZZ-MMDDYY, where XXX is a number that begins from 001 and increments by 1 up to the total number of cables being made by that vendor for that ProCard Order (regardless of whether the ProCard Order includes other assembled cables which are not fiber); ZZZZ are the last four digits of the ProCard number and MMDDYY is the month, day and year of the ProCard order.

c.) Vendors shall keep track of order numbers so that they do not get reused in future serial numbers, thereby preventing any two cables from having the same serial number.

d.) The labels shall also include the cables' end-end type (i.e. 12ST-Un**), its jacket type (OFNR or OFNP), the appropriate Fermi part number and the length in feet (F) or meters (M) for that cable. The following is an example of the label format:

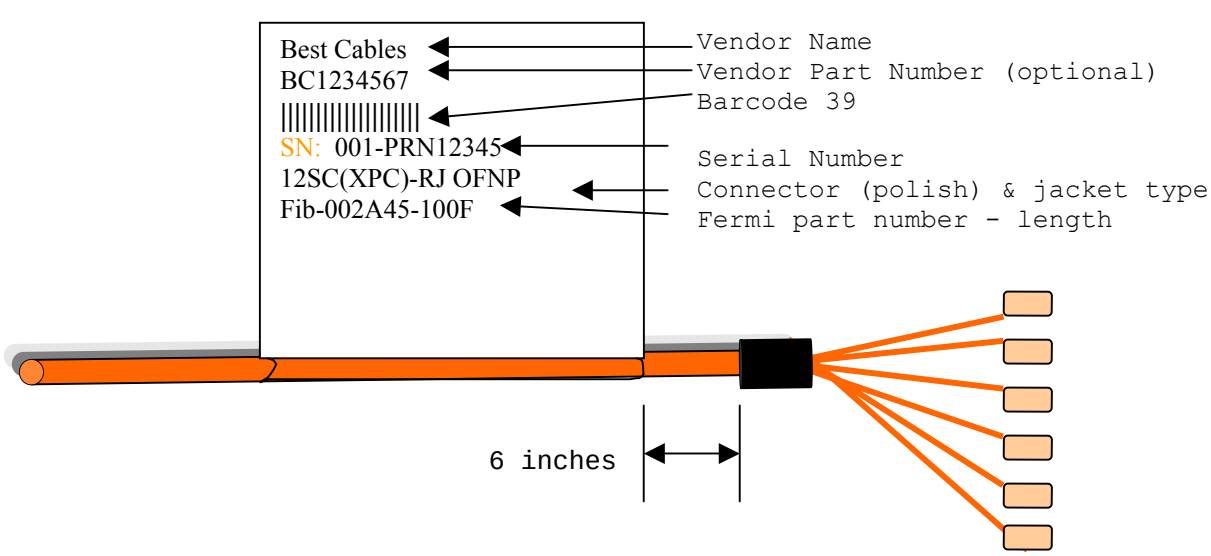

e.) The labels must be Kroy 2556701, Panduit LS5-10 or equivalent.

f.) The labels must be laminated such that the information on the labels does not smear, fade or become unreadable under normal handling and installation conditions.

g.) The font size **must** be 8-point or greater. Tiny, blotchy, smeared or otherwise unreadable characters will not be accepted.

(**Un: indicates that one end of the cable is unterminated or blunt.)

7. FERMI PART NUMBERS
==========

The number of pigtails in an assembly shall be defined as Pig(xx) in the part description and the number of fiber strands shall be defined as Str(xx). The following is a list of Fermilab fiber cable part numbers:

Fermilab#	Description
Fib-002A00	Cable,Fiber,Pig12-Str12,ST-Un,62.5/125,MM,OFNRiser (Cable: 1.b.3. Connectors: 2.a Design: 3.c.1)
Fib-002A01	Cable,Fiber,Pig12-Str12,ST-Un,62.5/125,MM,OFNPlenum (Cable: 1.b.4. Connectors: 2.a Design: 3.c.1)
Fib-002A02	Cable,Fiber,Pig12-Str12,ST-Un,8.3/125,SM,OFNRiser (Cable: 1.b.5. Connectors: 2.c Design: 3.c.1)
Fib-002A03	Cable,Fiber,Pig12-Str12,ST-Un,8.3/125,SM,OFNPlenum (Cable: 1.b.6. Connectors: 2.c Design: 3.c.1)
Fib-002A04	Cable,Fiber,Pig12-Str12,SC-Un,62.5/125,MM,OFNRiser (Cable: 1.b.3. Connectors: 2.b Design: 3.c.1)
Fib-002A05	Cable,Fiber,Pig12-Str12,SC-Un,62.5/125,MM,OFNPlenum (Cable: 1.b.4. Connectors: 2.b Design: 3.c.1)
Fib-002A06	Cable,Fiber,Pig12-Str12,SC-Un,8.3/125,SM,OFNRiser (Cable: 1.b.5. Connectors: 2.d Design: 3.c.1)
Fib-002A07	Cable,Fiber,Pig12-Str12,SC-Un,8.3/125,SM,OFNPlenum (Cable: 1.b.6. Connectors: 2.d Design: 3.c.1)
Fib-002A08	Cable,Fiber,Pig6-Str6,ST-Un,62.5/125,MM,OFNRiser (Cable: 1.b.1. Connectors: 2.a Design: 3.c.1)
Fib-002A09	Cable,Fiber,Pig6-Str6,ST-Un,62.5/125,MM,OFNPlenum (Cable: 1.b.2. Connectors: 2.a Design: 3.c.1)
Fib-002A10	Cable,Fiber,Pig6-Str6,ST-Un,8.3/125,SM,OFNRiser
Fib-002A11	Cable,Fiber,Pig6-Str6,ST-Un,8.3/125,SM,OFNPlenum
Fib-002A12	Cable,Fiber,Pig6-Str6,SC-Un,62.5/125,MM,OFNRiser (Cable: 1.b.1. Connectors: 2.c)
Fib-002A13	Cable,Fiber,Pig6-Str6,SC-Un,62.5/125,MM,OFNPlenum (Cable: 1.b.2. Connectors: 2.c)
Fib-002A14	Cable,Fiber,Pig6-Str6,SC-Un,8.3/125,SM,OFNRiser
Fib-002A15	Cable,Fiber,Pig6-Str6,SC-Un,8.3/125,SM,OFNPlenum

Fib-002A16 Cable,Fiber,Pig12-Str12,ST-MT(M),62.5/125,MM,OFNRiser
(Cable: 1.c.1. Connectors: 2.a & l Design: 3.b.1)

Fib-002A17 Cable,Fiber,Pig12-Str12,SC-MT(M),62.5/125,MM,OFNRiser
(Cable: 1.c.2. Connectors: 2.b & l Design: 3.b.1)

Fib-002A18 Cable,Fiber,Pig12-Str12,ST-MT(M),8.3/125,SM,OFNRiser
(Cable: 1.c.3. Connectors: 2.c & o Design: 3.b.1)

Fib-002A19 Cable,Fiber,Pig12-Str12,SC-MT(M),8.3/125,SM,OFNRiser
(Cable: 1.c.4. Connectors: 2.d & o Design: 3.b.1)

Fib-002A20 Cable,Fiber,Pig12-Str12,ST-ST,62.5/125,MM,OFNRiser
Fib-002A21 Cable,Fiber,Pig12-Str12,ST-ST,62.5/125,MM,OFNPlenum

Fib-002A22 Cable,Fiber,Pig12-Str12,ST-ST,8.3/125,SM,OFNRiser

Fib-002A23 Cable,Fiber,Pig12-Str12,ST-ST,8.3/125,SM,OFNPlenum

Fib-002A24 Cable,Fiber,Pig12-Str12,SC-ST,62.5/125,MM,OFNRiser

Fib-002A25 Cable,Fiber,Pig12-Str12,SC-ST,62.5/125,MM,OFNPlenum

Fib-002A26 Cable,Fiber,Pig12-Str12,SC-ST,8.3/125,SM,OFNRiser

Fib-002A27 Cable,Fiber,Pig12-Str12,SC-ST,8.3/125,SM,OFNPlenum

Fib-002A28 Cable,Fiber,Pig6-Str6,ST-ST,62.5/125,MM,OFNRiser

Fib-002A29 Cable,Fiber,Pig6-Str6,ST-ST,62.5/125,MM,OFNPlenum

Fib-002A30 Cable,Fiber,Pig6-Str6,ST-ST,8.3/125,SM,OFNRiser

Fib-002A31 Cable,Fiber,Pig6-Str6,ST-ST,8.3/125,SM,OFNPlenum

Fib-002A32 Cable,Fiber,Pig6-Str6,SC-ST,62.5/125,MM,OFNRiser

Fib-002A33 Cable,Fiber,Pig6-Str6,SC-ST,62.5/125,MM,OFNPlenum

Fib-002A34 Cable,Fiber,Pig6-Str6,SC-ST,8.3/125,SM,OFNRiser

Fib-002A35 Cable,Fiber,Pig6-Str6,SC-ST,8.3/125,SM,OFNPlenum

Fib-002A36 Cable,Fiber,Pig12-Str12,SC-SC,62.5/125,MM,OFNRiser

Fib-002A37 Cable,Fiber,Pig12-Str12,SC-SC,62.5/125,MM,OFNPlenum
(Cable: 1.b.4. Connectors: 2.b Design: 3.c.2)

Fib-002A38 Cable,Fiber,Pig12-Str12,SC-SC,8.3/125,SM,OFNRiser

Fib-002A39 Cable,Fiber,Pig12-Str12,SC-SC,8.3/125,SM,OFNPlenum

Fib-002A40 Cable,Fiber,Pig6-Str6,SC-SC,62.5/125,MM,OFNRiser

Fib-002A41 Cable,Fiber,Pig6-Str6,SC-SC,62.5/125,MM,OFNPlenum

Fib-002A42 Cable,Fiber,Pig6-Str6,SC-SC,8.3/125,SM,OFNRiser

Fib-002A43 Cable,Fiber,Pig6-Str6,SC-SC,8.3/125,SM,OFNPlenum

Fib-002A44 Cable,Fiber,Pig6-Str12,MTRJ(F)-SC(XPC),62.5/125,MM,OFNR
(Cable: 1.b.3. Connectors: 2.h & b Design: 3.c.2 & e.2)

Fib-002A45 Cable,Fiber,Pig6-Str12,MTRJ(F)-SC(XPC),62.5/125,MM,OFNP
(Cable: 1.b.4. Connectors: 2.h & b Design: 3.c.2 & e.2)

Fib-002A46 Cable,Fiber,Pig6-Str12,MTRJ(F)-SC(UPC),8.3/125,SM,OFNR
(Cable: 1.b.5. Connectors: 2.r & d Design: 3.c.2 & e.2)

Fib-002A47 Cable,Fiber,Pig6-Str12,MTRJ(F)-SC(UPC),8.3/125,SM,OFNP
(Cable: 1.b.6. Connectors: 2.r & d Design: 3.c.2 & e.2)

Fib-002A48 Cable,Fiber,Pig12-Str24,MTRJ(F)-SC(XPC),62.5/125,MM,OFNR
(Cable: 1.b.7. Connectors: 2.h & b Design: 3.c.2 & e.2)

Fib-002A49 Cable,Fiber,Pig12-Str24,MTRJ(F)-SC(XPC),62.5/125,MM,OFNP
(Cable: 1.b.8. Connectors: 2.h & b Design: 3.c.2 & e.2)

Fib-002A50 Cable,Fiber,Pig12-Str24,MTRJ-SC(UPC),8.3/125,SM,OFNR

Fib-002A51 Cable,Fiber,Pig12-Str24,MTRJ-SC(UPC),8.3/125,SM,OFNP

Fib-002A52 ----------

Fib-002A53 ----------

Fib-002A54 ----------

Fib-002A55 ----------

Fib-002A56 ----------

Fib-002A57 ----------

Fib-002A58 ----------

Fib-002A59 ----------

Fib-002A60 ----------

Fib-002A61 ----------

Fib-002A62 ----------

Fib-002A63 ----------

Fib-002A64 ----------

Fib-002A65 ----------

Fib-002A66 ----------

Fib-002A67 ----------

Fib-002A68 ----------

Fib-002A69 ----------

Fib-002A70 ----------

Fib-002A71 ----------

Fib-002A72 ----------

Fib-002A73 ----------

Fib-002A74 ----------

Fib-002A75 ----------

Fib-002A76 ----------

Fib-002A77 ----------

Fib-002A78 ----------

Fib-002A79 ----------

Fib-002A80 ----------

Fib-002A81 ----------

Fib-002A82 ----------

Fib-002A83 ----------

Fib-002A84 ----------

Fib-002A85 ----------

Fib-002A86 ----------

Fib-002A87 ----------

Fib-002A88 ----------

Fib-002A89 ----------

Fib-002A90	----------
Fib-002A91	----------
Fib-002A92	Cable,Fiber,Ribbon-12,MT(M)-Un,62.5/125,MM,OFNR
Fib-002A93	Cable,Fiber,Ribbon-12,MT(M)-Un,62.5/125,MM,OFNP
Fib-002A94	Cable,Fiber,Ribbon-12,MT(M)-Un,8.3/125,SM,OFNR
Fib-002A95	Cable,Fiber,Ribbon-12,MT(M)-Un,8.3/125,SM,OFNP
Fib-002A96	Cable,Fiber,Ribbon-12,MT(F)-MT(F),62.5/125,MM,OFNR
Fib-002A97	Cable,Fiber,Ribbon-12,MT(F)-MT(F),62.5/125,MM,OFNP
Fib-002A98	Cable,Fiber,Ribbon-12,MT(F)-MT(F),8.3/125,SM,OFNR
Fib-002A99	Cable,Fiber,Ribbon-12,MT(F)-MT(F),8.3/125,SM,OFNP
Fib-002B00	Cable,Fiber,Pig6-Str12,MTRJ(F)-Un,62.5/125,MM,OFNR (Cable: 1.b.3. Connectors: 2.h Design: 3.c.1 & e.2)
Fib-002B01	Cable,Fiber,Pig6-Str12,MTRJ(F)-Un,62.5/125,MM,OFNP (Cable: 1.b.4. Connectors: 2.h Design: 3.c.1 & e.2)
Fib-002B02	Cable,Fiber,Pig6-Str12,MTRJ(F)-Un,8.3/125,SM,OFNR (Cable: 1.b.5. Connectors: 2.r Design: 3.c.1 & e.2)
Fib-002B03	Cable,Fiber,Pig6-Str12,MTRJ(F)-Un,8.3/125,SM,OFNP (Cable: 1.b.6. Connectors: 2.r Design: 3.c.1 & e.2)
Fib-002B04	Cable,Fiber,Pig12-Str24,MTRJ(F)-Un,62.5/125,MM,OFNR (Cable: 1.b.7. Connectors: 2.h Design: 3.c.1 & e.2)
Fib-002B05	Cable,Fiber,Pig12-Str24,MTRJ(F)-Un,62.5/125,MM,OFNP (Cable: 1.b.8. Connectors: 2.h Design: 3.c.1 & e.2)
Fib-002B06	Cable,Fiber,Pig12-Str24,MTRJ-Un,8.3/125,SM,OFNR
Fib-002B07	Cable,Fiber,Pig12-Str24,MTRJ-Un,8.3/125,SM,OFNP
Fib-002B08	Cable,Fiber,Pig72-Str72,SC-Un,62.5/125,MM,OFNR
Fib-002B09	Cable,Fiber,Pig72-Str72,SC-Un,62.5/125,MM,OFNP
Fib-002B10	Cable,Fiber,Pig72-Str72,SC-Un,8.3/125,SM,OFNR
Fib-002B11	Cable,Fiber,Pig72-Str72,SC-Un,8.3/125,SM,OFNP
Fib-002B12	Cable,Fiber,Pig72-Str72,SC-SC,62.5/125,MM,OFNR

Fib-002B13 Cable,Fiber,Pig72-Str72,SC-SC,62.5/125,MM,OFNP

Fib-002B14 Cable,Fiber,Pig72-Str72,SC-SC,8.3/125,SM,OFNR

Fib-002B15 Cable,Fiber,Pig72-Str72,SC-SC,8.3/125,SM,OFNP

Fib-002B16 Cable,Fiber,Pig6-Str12,MTRJ(F)-Un,62.5/125,MM,OFNR
(Cable: 1.c.1. Connectors: 2.h Design: 3.f.1 & e.2)

Fib-002B17 Cable,Fiber,Pig6-Str12,MTRJ(F)-Un,62.5/125,MM,OFNP
(Cable: 1.c.2. Connectors: 2.h Design: 3.f.1 & e.2)

Fib-002B18 Cable,Fiber,Pig6-Str12,MTRJ(F)-Un,8.3/125,SM,OFNR
(Cable: 1.c.3. Connectors: 2.r Design: 3.f.1 & e.2)

Fib-002B19 Cable,Fiber,Pig6-Str12,MTRJ(F)-Un,8.3/125,SM,OFNP
(Cable: 1.c.4. Connectors: 2.r Design: 3.f.1 & e.2)

Fib-002B20 Cable,Fiber,Pig12-Str24,MTRJ(F)-Un,62.5/125,MM,OFNR

Fib-002B21 Cable,Fiber,Pig12-Str24,MTRJ(F)-Un,62.5/125,MM,OFNP
(Cable: 1.c.6. Connectors: 2.h Design: 3.f.1 & e.2)

Fib-002B22 Cable,Fiber,Pig12-Str24,MTRJ(F)-Un,8.3/125,SM,OFNR

Fib-002B23 Cable,Fiber,Pig12-Str24,MTRJ(F)-Un,8.3/125,SM,OFNP

Fib-002B24 Cable,Fiber,Pig2-Str2,ST-Un,62.5/25,MM,NR
(Cable: 1.d.1. Connectors: 2.a Design: 3.b.2)

Fib-002B25 ----------

Fib-002B26 ----------

Fib-002B27 ----------

Fib-002B28 Cable,Fiber,Pig2-Str2,SC-Un,62.5/25,MM, NR
(Cable: 1.d.1. Connectors: 2.b Design: 3.b.2)

Fib-002B29 ----------

Fib-002B30 ----------

Fib-002B31 ----------

Fib-002B32 Cable,Fiber,Pig4-Str4,ST-Un,62.5/125,MM, NR
(Cable: 1.d.2. Connectors: 2.a Design: 3.b.2)

Fib-002B33 ----------

Fib-002B34 Cable,Fiber,Pig4-Str4,ST-Un,8.3/125,SM,NR
(Cable: 1.d.6. Connectors: 2.c Design: 3.b.2)

Fib-002B35 ----------

Fib-002B36 Cable,Fiber,Pig4-Str4,SC-Un,62.5/125,MM,NR
(Cable: 1.d.2. Connectors: 2.b Design: 3.b.2)

Fib-002B37 ----------

Fib-002B38 Cable,Fiber,Pig4-Str4,SC-Un,8.3/125,SM,NR
(Cable: 1.d.6. Connectors: 2.d Design: 3.b.2)

Fib-002B39 ----------

Fib-002B40 Cable,Fiber,Pig6-Str6,ST-Un,62.5/125,MM,NR
(Cable: 1.d.3. Connectors: 2.a Design: 3.b.2)

Fib-002B41

Fib-002B42 Cable,Fiber,Pig6-Str6,ST-Un,8.3/125,SM,NR
(Cable: 1.d.7. Connectors: 2.c Design: 3.b.2)

Fib-002B43

Fib-002B44 Cable,Fiber,Pig6-Str6,SC-Un,62.5/125,MM,NR
(Cable: 1.d.3. Connectors: 2.b Design: 3.b.2)

Fib-002B45 ----------

Fib-002B46 Cable,Fiber,Pig6-Str6,SC-Un,8.3/125,SM,NR
(Cable: 1.d.7. Connectors: 2.d Design: 3.b.2)

Fib-002B47 ----------

Fib-002B48 Cable,Fiber,Pig12-Str12,ST-Un,62.5/125,MM,NR
(Cable: 1.d.4. Connectors: 2.a Design: 3.b.2 & e.2.c)

Fib-002B49 ----------

Fib-002B50 Cable,Fiber,Pig12-Str12,ST-Un,8.3/125,SM,NR
(Cable: 1.d.8. Connectors: 2.c Design: 3.b.2 & e.2.c)

Fib-002B51 ----------

Fib-002B52 Cable,Fiber,Pig12-Str12,SC-Un,62.5/125,MM,NR
(Cable: 1.d.4. Connectors: 2.b Design: 3.b.2 & e.2.c)

Fib-002B53 ----------

Fib-002B54 Cable,Fiber,Pig12-Str12,SC-Un,8.3/125,SM,NR
(Cable: 1.d.8. Connectors: 2.d Design: 3.b.2 & e.2.c)

Fib-002B55 ----------

Fib-002B56 Cable,Fiber,Pig18-Str18,ST-Un,62.5/125,MM,NR
(Cable: 1.d.5. Connectors: 2.a Design: 3.b.2 & e.2.c)

Fib-002B57 ----------

Fib-002B58 Cable,Fiber,Pig18-Str18,ST-Un,8.3/125,SM,NR
(Cable: 1.d.9. Connectors: 2.c Design: 3.b.2 & e.2.c)

Fib-002B59 ----------

Fib-002B60 Cable,Fiber,Pig18-Str18,SC-Un,62.5/125,MM,NR
(Cable: 1.d.5. Connectors: 2.b Design: 3.b.2 & e.2.c)

Fib-002B61 ----------

Fib-002B62 Cable,Fiber,Pig18-Str18,SC-Un,8.3/125,SM,NR
(Cable: 1.d.9. Connectors: 2.d Design: 3.b.2 & e.2.c)

Fib-002B63 ----------

Fib-002B64

Fib-002B65 ----------

Fib-002B66

Fib-002B67 ----------

Fib-002B68

Fib-002B69 ----------

Fib-002B70

Fib-002B71 ----------

Fib-002B72 Cable,Fiber,Pig24-Str24,SC-SC,62.5/125,MM,OFNRiser
(Cable: 1.b.7. Connectors: 2.b Design: 3.c.2)

Fib-002B73 Cable,Fiber,Pig24-Str24,SC-SC,62.5/125,MM,OFNPlenum
(Cable: 1.b.8. Connectors: 2.b Design: 3.c.2)

Fib-002B74 Cable,Fiber,Pig24-Str24,SC-SC,8.3/125,SM,OFNRiser
(Cable: 1.b.9. Connectors: 2.d Design: 3.c.2)

Fib-002B75 Cable,Fiber,Pig24-Str24,SC-SC,8.3/125,SM,OFNPlenum
(Cable: 1.b.10. Connectors: 2.d Design: 3.c.2)

Fib-002B76 Cable,Fiber,Pig18-Str18,SC-SC,62.5/125,MM,OFNRiser
(Cable: 1.d.9. Connectors: 2.b Design: 3.b.2 & e.2.c)

Fib-002B77 Cable,Fiber,Pig18-Str18,SC-SC,62.5/125,MM,OFNPlenum

Fermilab CD/DCI Tech Note

Cable, Fiber-TN-002.29

(Cable: 1.d.10. Connectors: 2.b Design: 3.b.2 & e.2.c)

Fib-002B78 Cable,Fiber,Pig18-Str18,SC-SC,8.3/125,SM,OFNRiser
(Cable: 1.d.19. Connectors: 2.d Design: 3.b.2 & e.2.c)

Fib-002B79 Cable,Fiber,Pig18-Str18,SC-SC,8.3/125,SM,OFNPlenum
(Cable: 1.d.20. Connectors: 2.d Design: 3.b.2 & e.2.c)

Fib-002B80 Cable,Fiber,Pig4-Str4,ST-ST,62.5/125,MM,OFNRiser
(Cable: 1.b.11. Connectors: 2.a Design: 3.c.2 & e.1)

Fib-002B81 Cable,Fiber,Pig4-Str4,ST-ST,62.5/125,MM,OFNPlenum
(Cable: 1.b.12. Connectors: 2.a Design: 3.c.2 & e.1)

Fib-002B82 Cable,Fiber,Pig4-Str4,ST-ST,8.3/125,SM,OFNRiser
(Cable: 1.b.13. Connectors: 2.c Design: 3.c.2 & e.1)

Fib-002B83 Cable,Fiber,Pig4-Str4,ST-ST,8.3/125,SM,OFNPlenum
(Cable: 1.b.14. Connectors: 2.c Design: 3.c.2 & e.1)

Fib-002B84 Reserved

Fib-002B85 Reserved

Fib-002B86 Reserved

Fib-002B87 Reserved

Fib-002B88 Reserved

Fib-002B89 Reserved

Fib-002B90 Reserved

Fib-002B91 Reserved

Fib-002B92 Reserved

Fib-002B93 Reserved

Fib-002B94 Reserved
Fib-002B95 Reserved

Fib-002B96 Cable,Fiber,Pig12-Str12,SC-Un,62.5/125,MM,OFNRiser
(Cable: 1.c.1. Connectors: 2.b Design: 3.f.1)

Fib-002B97 Cable,Fiber,Pig12-Str12,SC-Un,62.5/125,MM,OFNPlenum
(Cable: 1.c.2. Connectors: 2.b Design: 3.f.1)

Fib-002B98 Cable,Fiber,Pig12-Str12,SC-Un,8.3/125,SM,OFNRiser
(Cable: 1.c.3. Connectors: 2.d Design: 3.f.1)

Fib-002B99 Cable,Fiber,Pig12-Str12,SC-Un,8.3/125,SM,OFNPlenum

(Cable: 1.c.4. Connectors: 2.d Design: 3.f.1)

Fib-002C00 Cable,Fiber,Pig6-Str12,MTRJ(M)-Un,62.5/125,MM,OFNR
(Cable: 1.b.3. Connectors: 2.i Design: 3.c.1 & e.2)

Fib-002C01 Cable,Fiber,Pig6-Str12,MTRJ(M)-Un,62.5/125,MM,OFNP
(Cable: 1.b.4. Connectors: 2.i Design: 3.c.1 & e.2)

Fib-002C02 Cable,Fiber,Pig6-Str12,MTRJ(M)-Un,8.3/125,SM,OFNR
(Cable: 1.b.5. Connectors: 2.s Design: 3.c.1 & e.2)

Fib-002C03 Cable,Fiber,Pig6-Str12,MTRJ(M)-Un,8.3/125,SM,OFNP
(Cable: 1.b.6. Connectors: 2.s Design: 3.c.1 & e.2)

Fib-002C04 Cable,Fiber,Pig12-Str24,MTRJ(M)-Un,62.5/125,MM,OFNR
(Cable: 1.b.7. Connectors: 2.i Design: 3.c.1 & e.2)

Fib-002C05 Cable,Fiber,Pig12-Str24,MTRJ(M)-Un,62.5/125,MM,OFNP
(Cable: 1.b.8. Connectors: 2.i Design: 3.c.1 & e.2)

Fib-002C06 Cable,Fiber,Pig12-Str24,MTRJ(M)-Un,8.3/125,SM,OFNR

Fib-002C07 Cable,Fiber,Pig12-Str24,MTRJ(M)-Un,8.3/125,SM,OFNP

Fib-002C08 Cable,Fiber,Pig6-Str12,MTRJ(M)-Un,62.5/125,MM,OFNR
(Cable: 1.c.1. Connectors: 2.i Design: 3.f.1 & e.2)

Fib-002C09 Cable,Fiber,Pig6-Str12,MTRJ(M)-Un,62.5/125,MM,OFNP
(Cable: 1.c.2. Connectors: 2.i Design: 3.f.1 & e.2)

Fib-002C10 Cable,Fiber,Pig6-Str12,MTRJ(M)-Un,8.3/125,SM,OFNR
(Cable: 1.c.3. Connectors: 2.s Design: 3.f.1 & e.2)

Fib-002C11 Cable,Fiber,Pig6-Str12,MTRJ(M)-Un,8.3/125,SM,OFNP
(Cable: 1.c.4. Connectors: 2.s Design: 3.f.1 & e.2)

Fib-002C12 Cable,Fiber,Pig12-Str24,MTRJ(M)-Un,62.5/125,MM,OFNR

Fib-002C13 Cable,Fiber,Pig12-Str24,MTRJ(M)-Un,62.5/125,MM,OFNP
(Cable: 1.c.6. Connectors: 2.i Design: 3.f.1 & e.2)

Fib-002C14 Cable,Fiber,Pig12-Str24,MTRJ(M)-Un,8.3/125,SM,OFNR

Fib-002C15 Cable,Fiber,Pig12-Str24,MTRJ(M)-Un,8.3/125,SM,OFNP